Lab Project : Combinational Traffic Light Controller

Ghaid Nasser Tayeb	2510283
Lamar Essam Kashmeri	2510612
Sarah Humidan Almahyawi	2510186
Ahad Halawani	2510718

Truth table

M = main road
S = side road
MR_Y & SR_Y are always 0

M	S	MR_Green	MR_Yellow	MR_Red	SR_Green	SR_Yellow	SR_Red
0	0	1	0	0	0	0	1
0	1	0	0	1	1	0	0
1	0	1	0	0	0	0	1
1	1	1	0	0	0	0	1

Boolean Algebra

MR_G = M'S' + MS' + MS
= S' (M' + M) + MS
= S' (1) + MS
= S' + MS
= M + S'

MR_R = M'S

SR_G = M'S

SR_R = M'S' + MS' + MS
= S' (M' + M) + MS
= S' (1) + MS
= S' + MS
= M + S'

Equations

$$MR_G = M + S'$$

$$MR_R = M' \cdot S$$

$$SR_G = MR_R = M' \cdot S$$

$$SR_R = MR_G = M + S'$$

Circuit Design

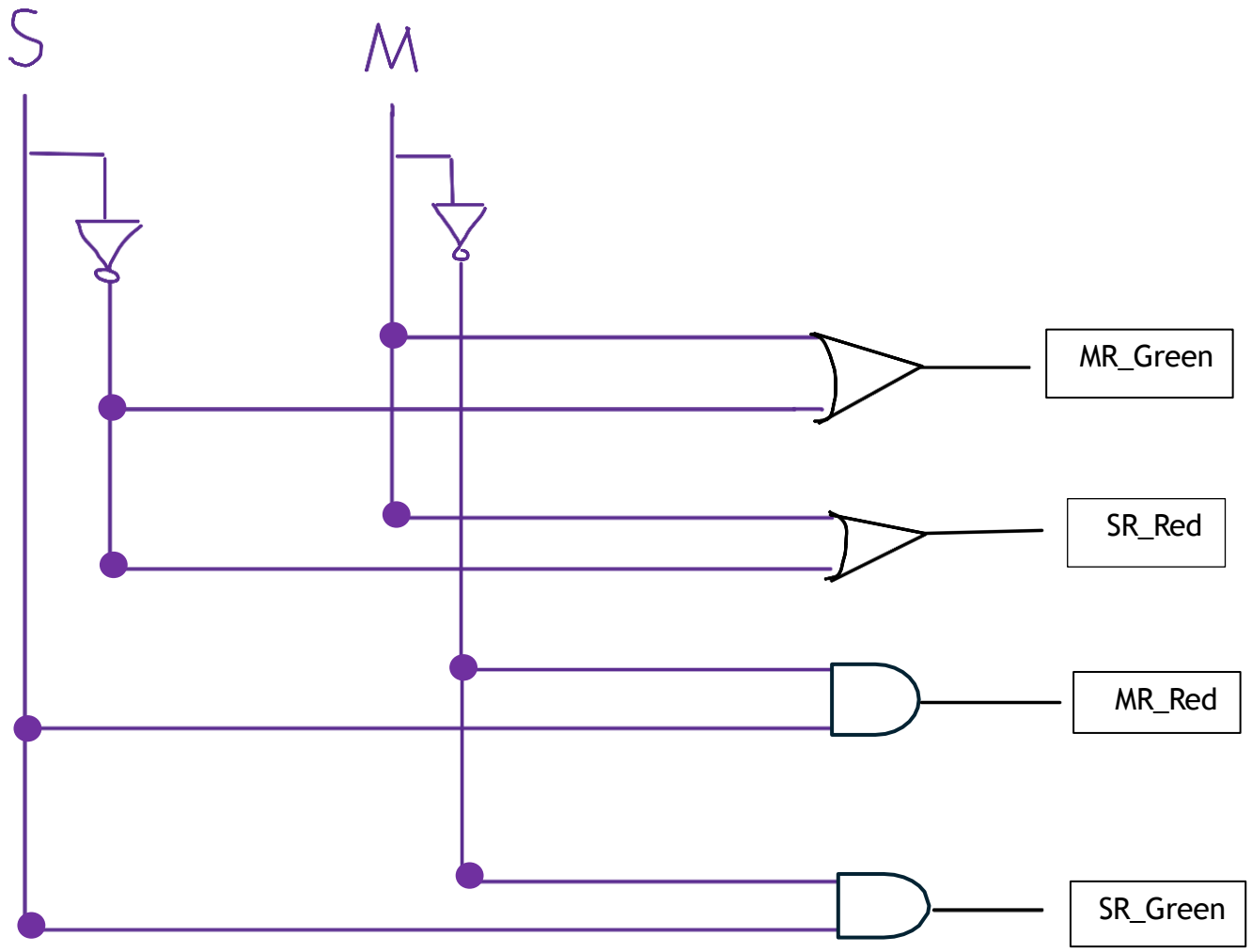

https://www.tinkercad.com/things/cFa7Ou3KFXs-cecn281-project/editel?sharecode=8j296hC7EatHJdruyUiCzu8X4h01evfTCLj3vyUho6g

Schematic

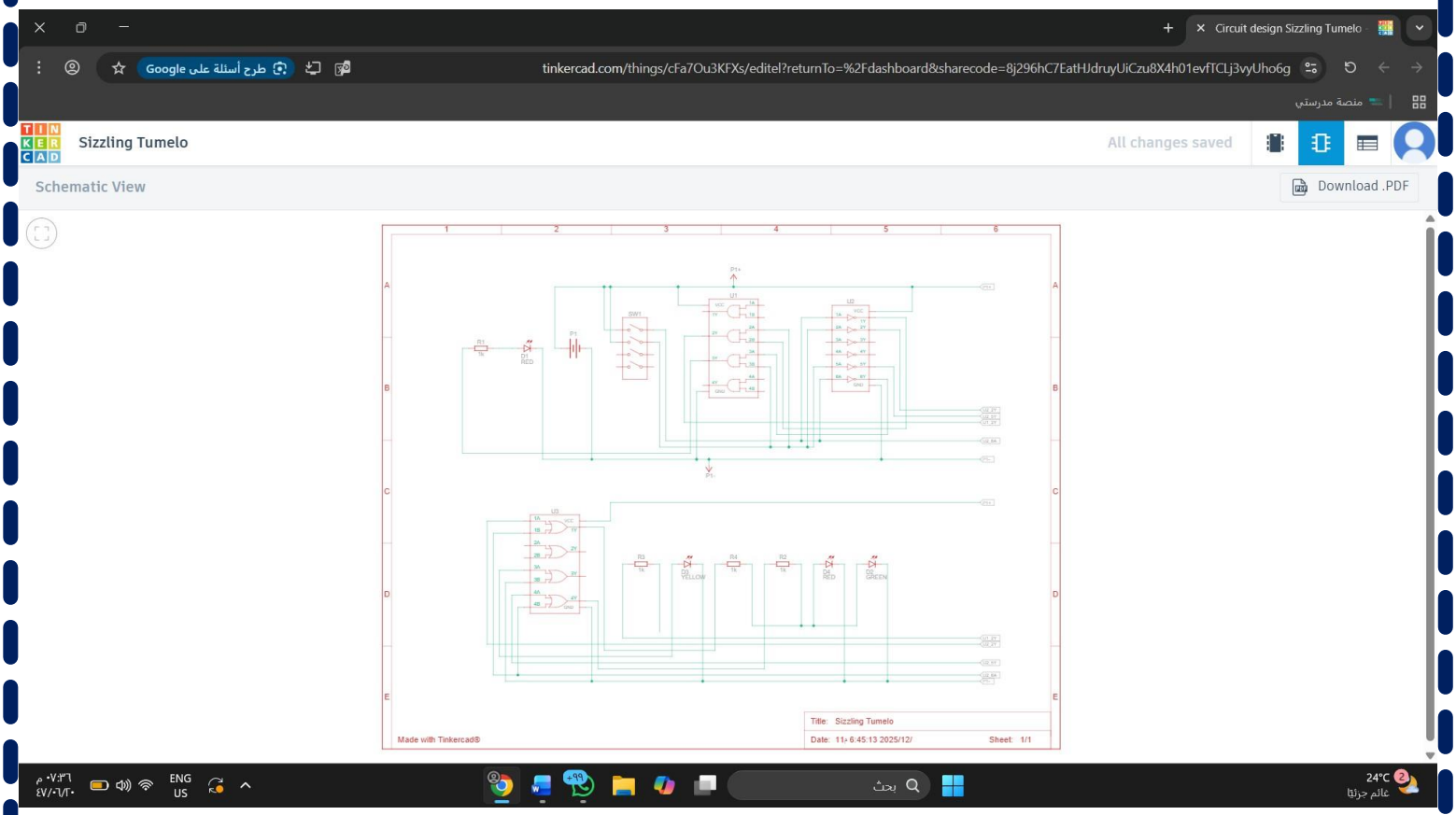

Circuit Implemented in Tinkercad

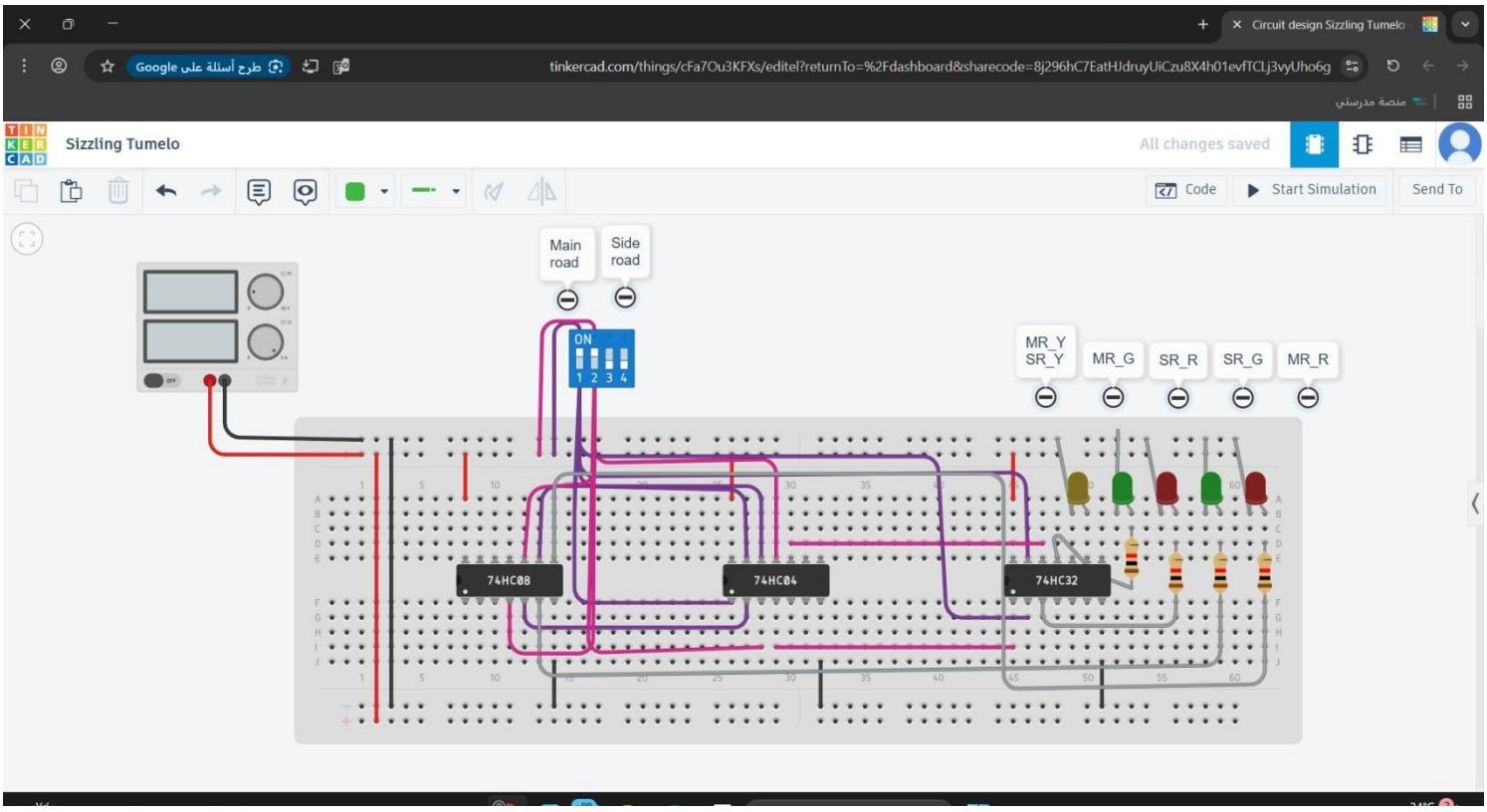

M	S	MR_Green	MR_Yellow	MR_Red	SR_Green	SR_Yellow	SR_Red
0	0	1	0	0	0	0	1

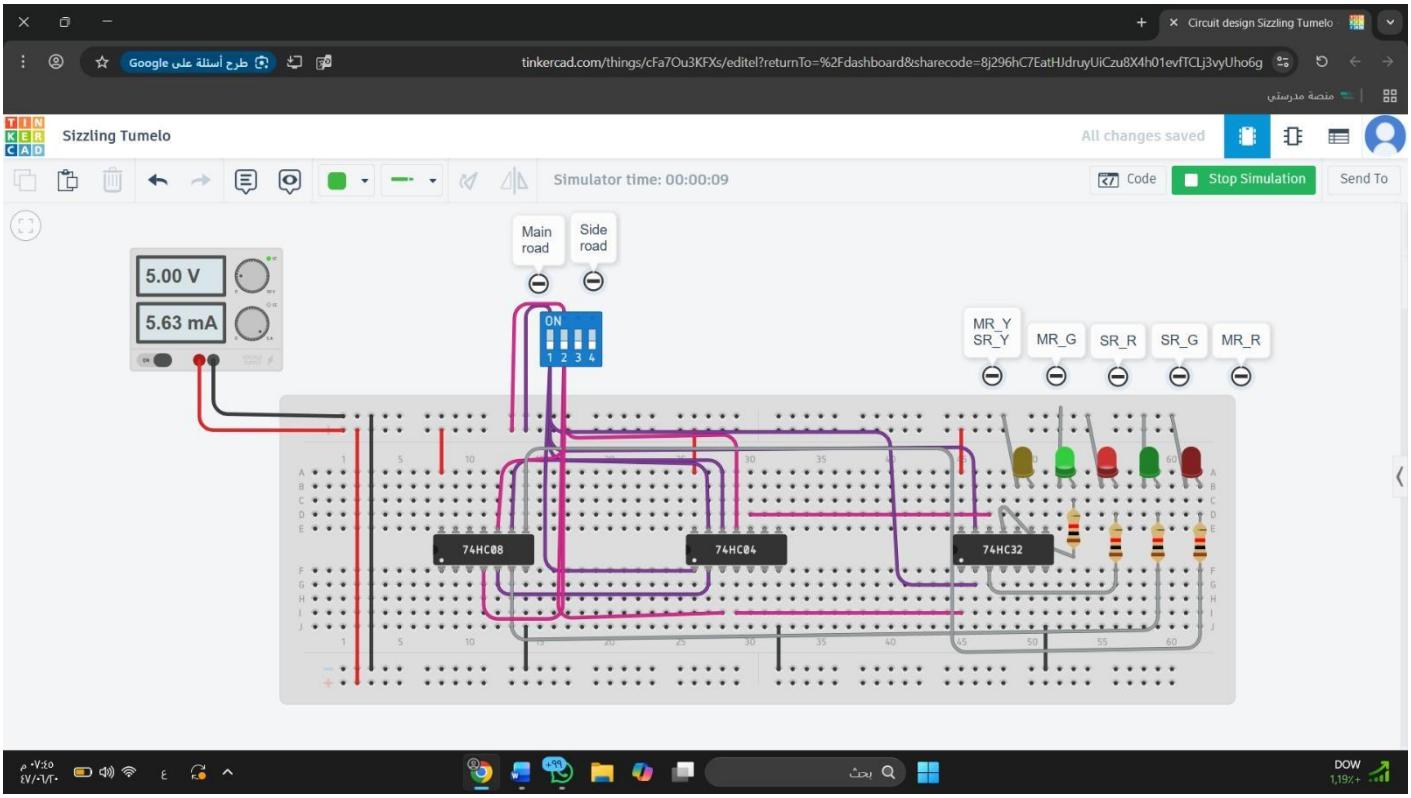

M	S	MR_Green	MR_Yellow	MR_Red	SR_Green	SR_Yellow	SR_Red
0	1	0	0	1	1	0	0

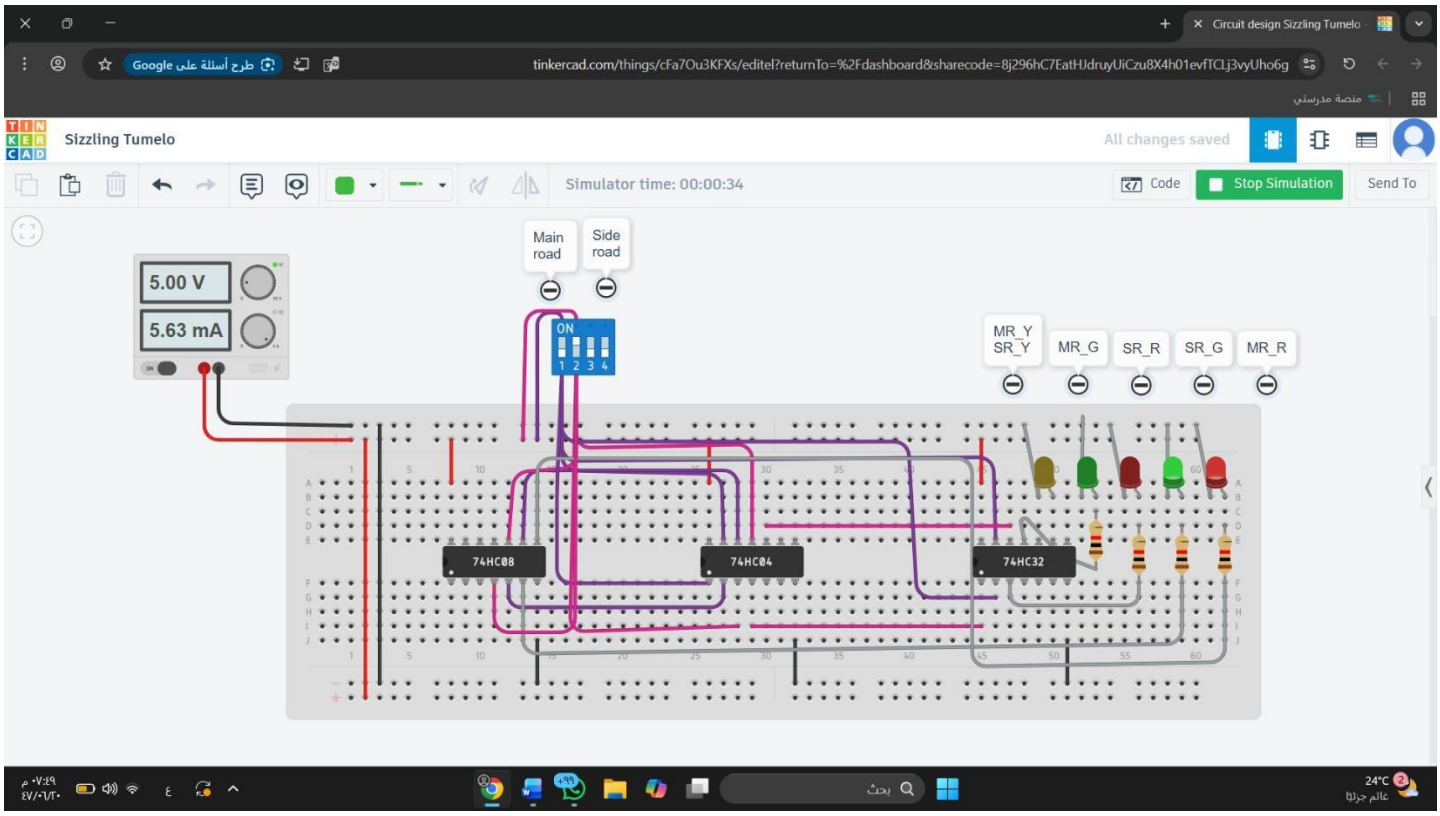

M	S	MR_Green	MR_Yellow	MR_Red	SR_Green	SR_Yellow	SR_Red
1	0	1	0	0	0	0	1

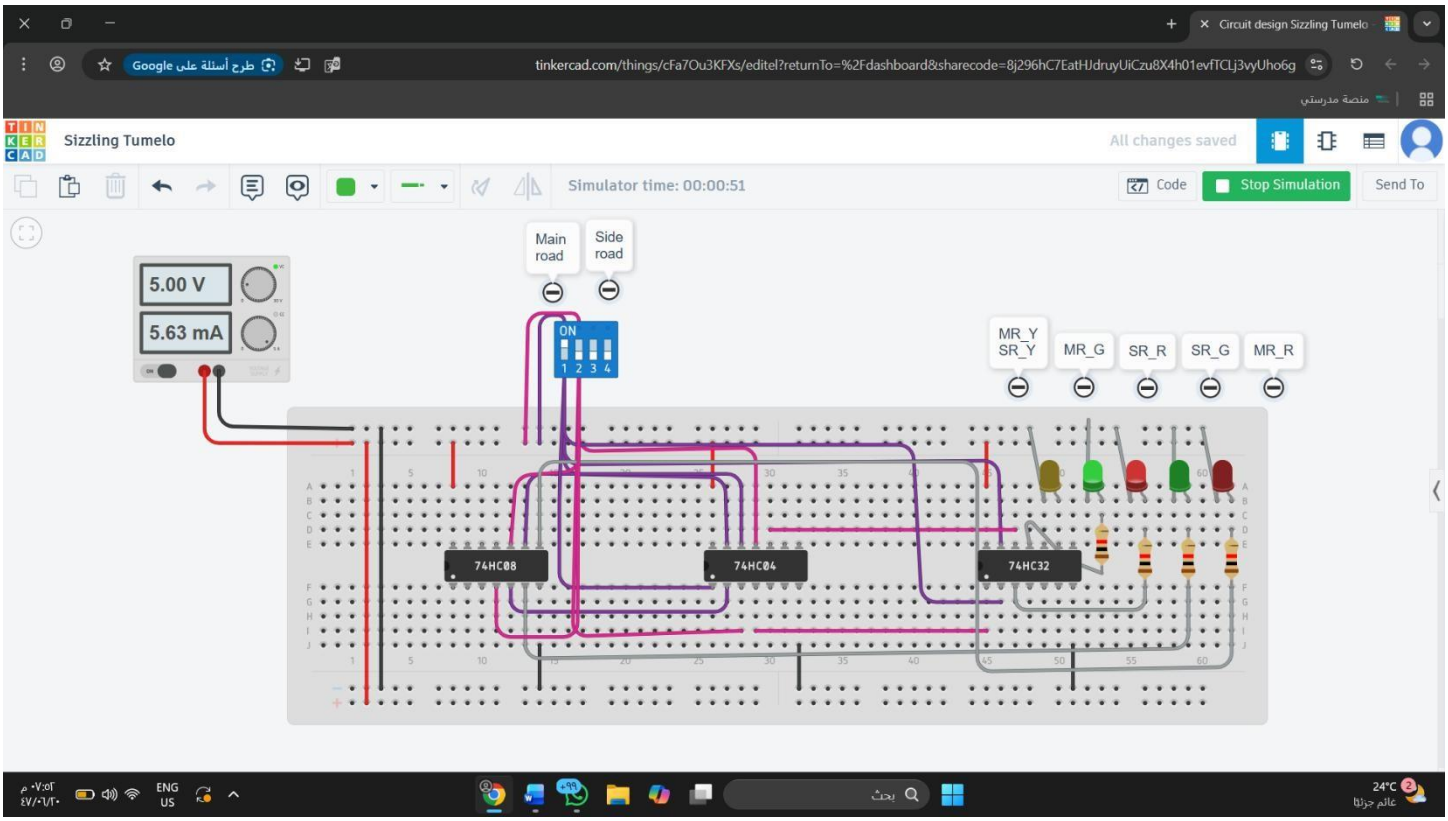
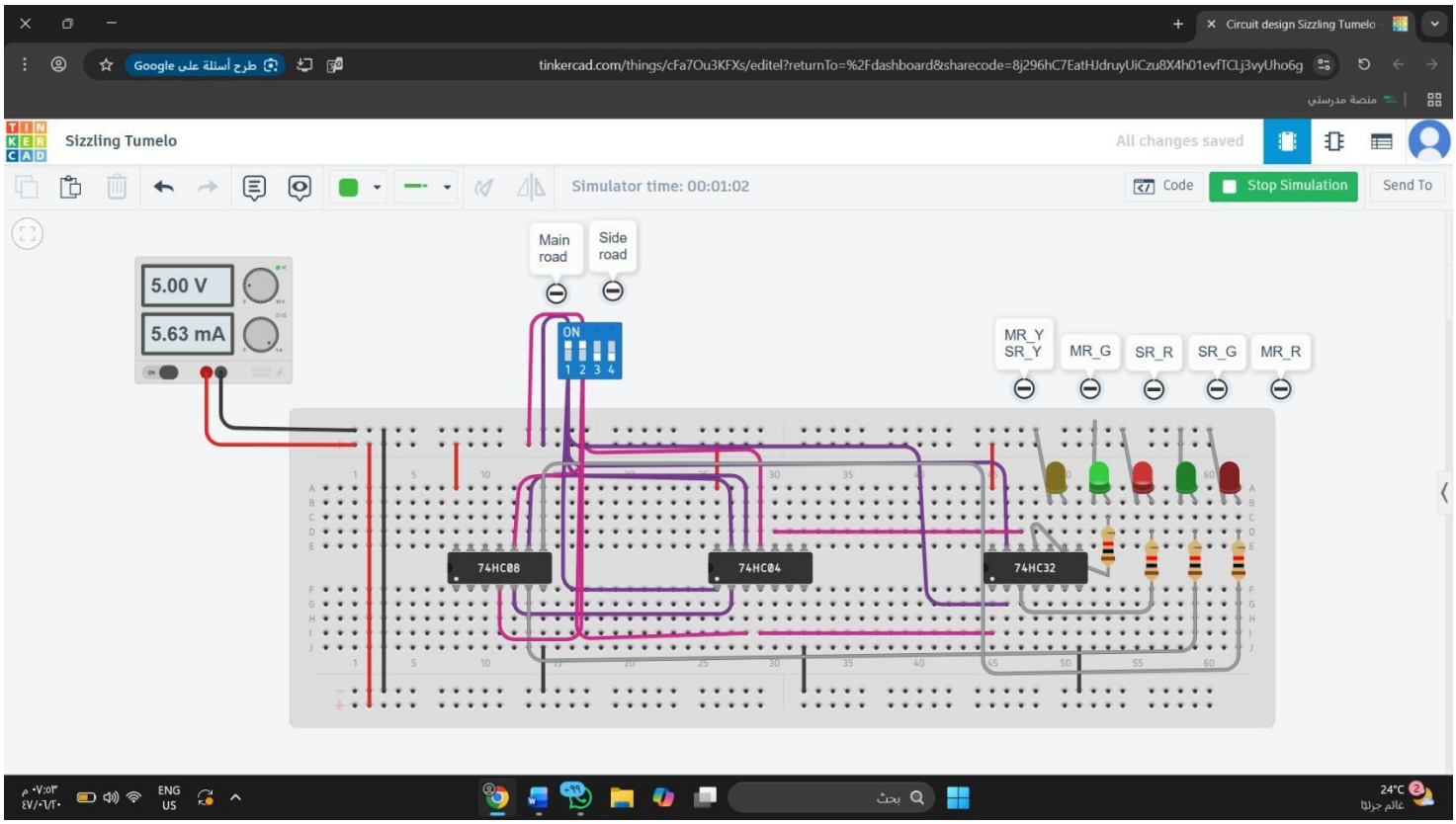
M	S	MR_Green	MR_Yellow	MR_Red	SR_Green	SR_Yellow	SR_Red
1	1	1	0	0	0	0	1